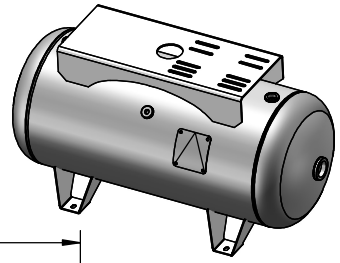

ITEM NO.	PART NO.	DESCRIPTION	QTY.
1	A302470-SL	SHELL LAYOUT FOR 16" O.D. TANK	1
2	H32011	.099 MIN. 16" O.D. 2:1 ELLIP. JOG. HEAD	2
3	F30315	1 1/2"-NPT FLAT FLANGE O-RING	2
4	F31840	3/4"-NPT FLAT FLANGE	3
5	F10250	1/2"-NPT FLAT FLANGE	1
6	F31826	1/4"-NPT FLAT FLANGE	1
7	A55819	FOOT WING FOR 16" TANK	4
8	A20910	ASME DATA PLATE	1
9	A55175	7GA TOPPLATE	1

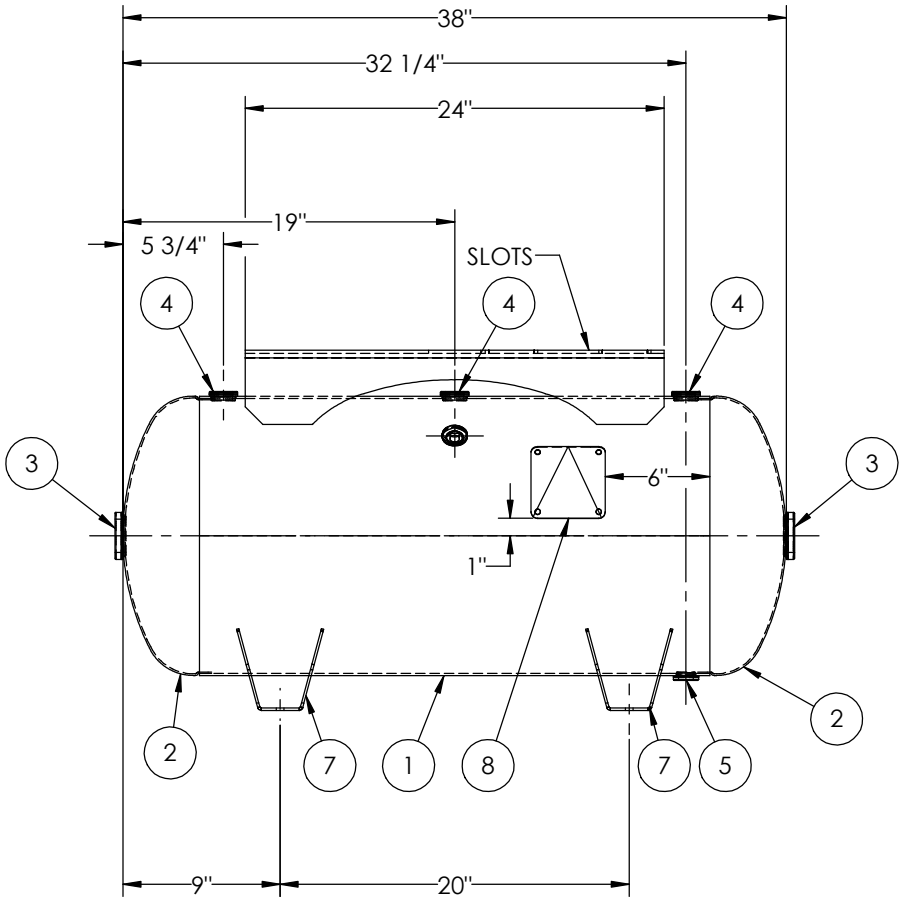

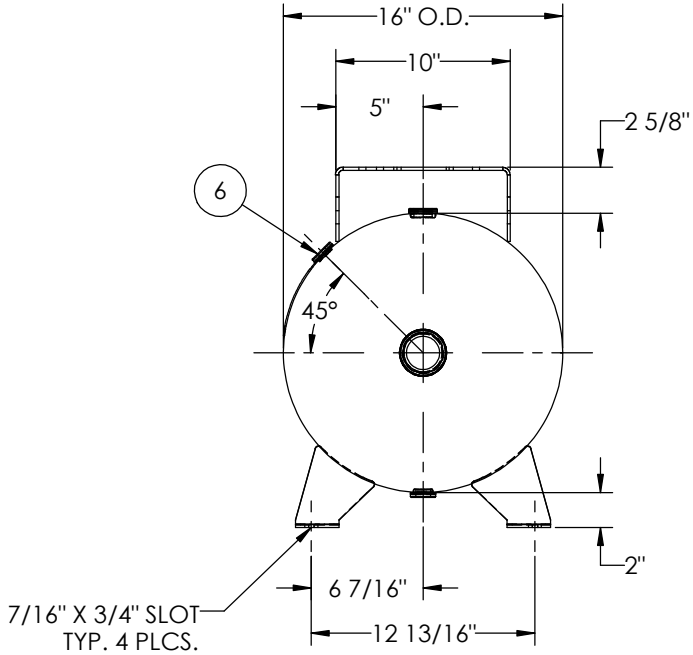

NOTES:

RELEASED FOR PRODUCTION
Q.C. _____ DATE _____

SPECIFICATIONS

O.D. 16 LGTH. 38 MAWP 200 PSI @ 400°F
WT. 104 LBS.
S.A. 14.1 SQ.FT.
GAL. 30 CU.FT.4 CRN: F2151.1C W
CODE: ASME Section VIII, Div.1, LATEST EDITION EXMT UG20(f) CORR ALW 0 SH 0 HD
STD. TOLERANCES: M-2461 (UNLESS OTHERWISE NOTED) WELD DETAILS: M-1932

REVISIONS

REV.	BY		DATE	APP.
A	EGB			EGB
B	MR			MR
C	JC			JC
D	DS			DS
E	UG			MK

MANCHESTER TANK

HORIZONTAL AIR RECEIVER

DRAWN BY: EGB	DATE:
APPR. BY: EGB	DATE:
SCALE: NONE	DRWG NO. **302470**