CODE/ADDENDA 2004/2006 APPROVED KM
RELEASED FOR PRODUCTION
Q.C. _____ DATE _____

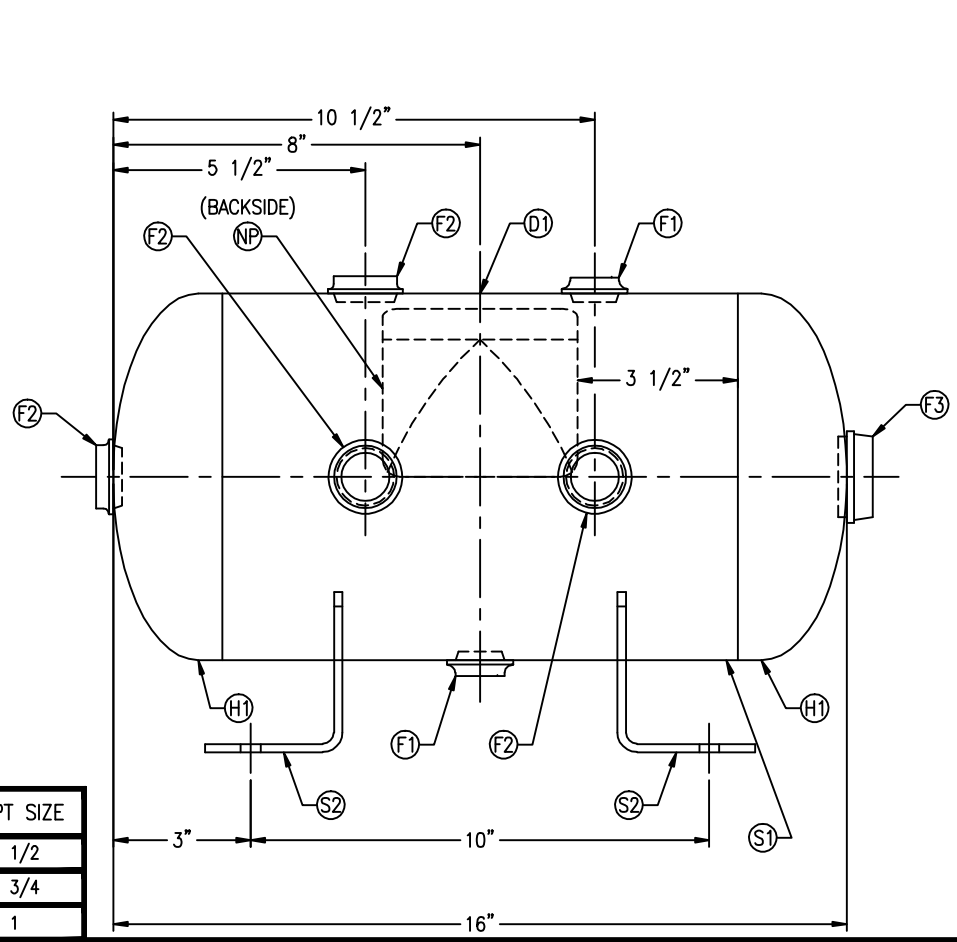

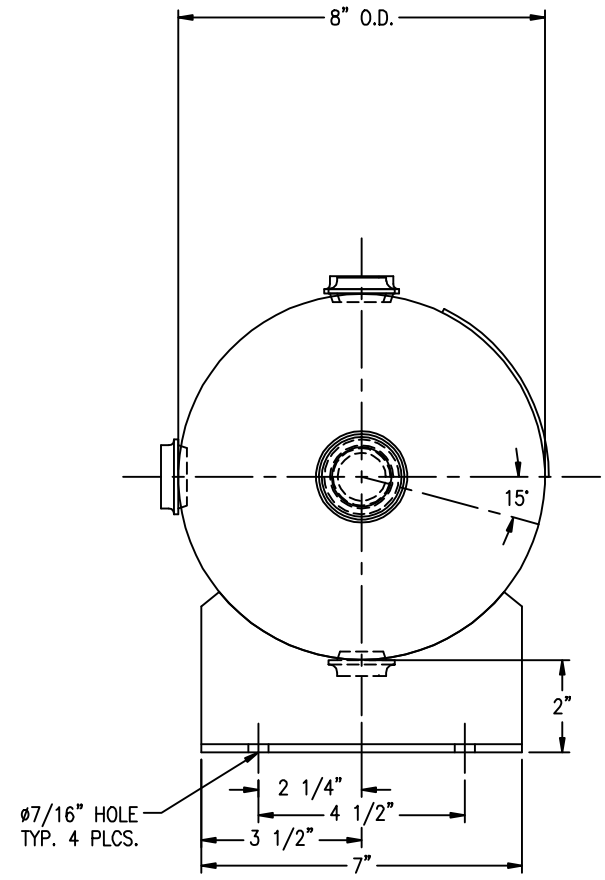

FIND NO.	NPT SIZE
F1	1/2
F2	3/4
F3	1

SYM	DATE	BY	REVISION	APP	XREF REV.
					C1018 A

NOTES

1. ALL PLUGS TO BE LOOSENED TO HAND TIGHT PLUS ONE HALF TURN PRIOR TO SHIPMENT.

SPECIFICATIONS

O.D. 8 LGTH. 16
MAWP 200 PSI @ 650 °F

GAL. 3.0 S.A. 3.0
WT. 19# CU.FT. .40

W

CRN H9635.5123467890

CODE: ASME SEC. VIII DIV. I, LATEST EDITION & ADDENDA

WELD DETAILS: M-1932
STD. TOLERANCES (UNLESS OTHERWISE NOTED): M-2461

MANCHESTER TANK \\CORP2\DWG\304

HORIZONTAL AIR RECEIVER

DRAWN BY	DATE	SCALE: NONE
APP. BY	DATE	DRAWING NO. 304982