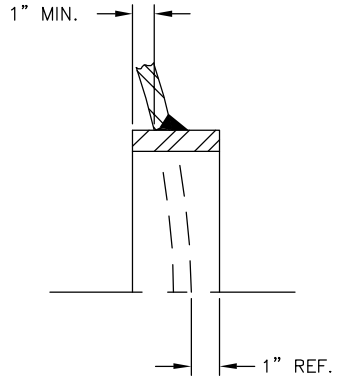

MANWAY DETAIL

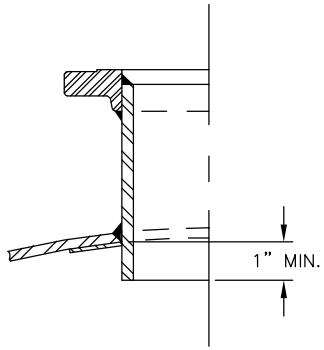

NOZZLE DETAIL

NO.	QTY.	DESCRIPTION	SPEC	SUB-DWG.
S1	1			
S2	1			
H1	2			
C1	1	3"-NPT 3000# HALF COUPLING	SA-105	
F1	1	1"-NPT 1500# FLAT FLANGE	SA-181-70	
F2	1	1/4"-NPT 1500# FLAT FLANGE	SA-181-70	
F3	1	1"-NPT 1500# RADIAL FLANGE	SA-181-70	
F4	2	6" 150# ANSI RF.SO. FLANGE	SA-105	
F4	2	6" SCH. 80 PIPE X 7 1/2" LONG	SA-106-B	
F4	2	.134 X 8 5/8" O.D. X 6 5/8" I.D. BACKING RING	C1008	
F5	1	1 1/4" NPT 1500# FLAT FLANGE	SA-181-70	
F6	1	1 1/4" NPT 1500# RADIAL FLANGE	SA-181-70	
M1	1	12" X 16" X 3/4" X 4" 300# MANWAY	SA-675-70	
A1	4	1" X 6" X 6" STANDARD LIFT LUG		A86004
S3	1	STANDARD 8" SKIRT & CLIP ASSY. FOR 72" DIA. TANK		A86003
NP	1	ASME DATA PLATE	C1010	

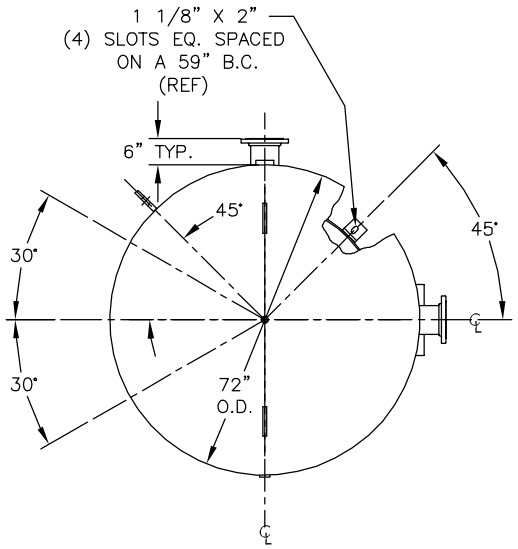

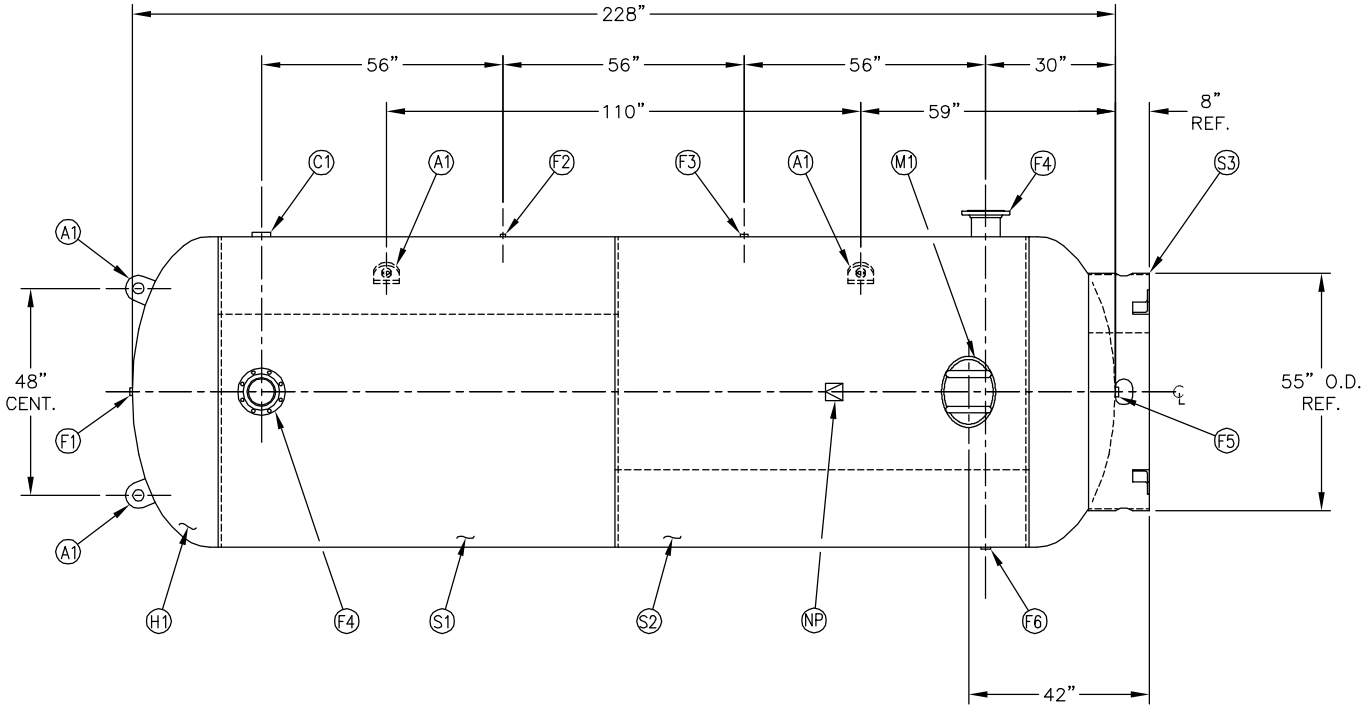

ENG._____ DATE_____
Q.C._____ DATE_____

SYM	DATE	BY	REVISION	APP	XREF REV.	NOTES
A		BAK		AMA		

SPECIFICATIONS

O.D. 72 LGTH. 228
MAWP 165 PSI @ 400 °F
RT- MDMT -20 °F@ 165 PSI
EXMT TEST PSI
XRAY
CRN T1800.264

SH.
HD.
GAL. 3800 S.A. 301.59
WT. 6800 CU.FT. 499.00
CORR ALW SH HD
CODE ASME SECT. VIII, DIV.1
PER DATE OF DWG/LAST REV

WELD DETAILS: M-1932
STD. TOLERANCES (UNLESS OTHERWISE NOTED): M-2461

MANCHESTER TANK Q:\3000

72" X 228" VERTICAL
STANDARD AIR RECEIVER

DRAWN BY B.Skinner DATE
APP. BY J.Reed DATE
SCALE: NONE
DRAWING NO. 302457