CODE/ADDENDA 2004/2006 APPROVED KM
RELEASED FOR PRODUCTION
Q.C. _____ DATE _____

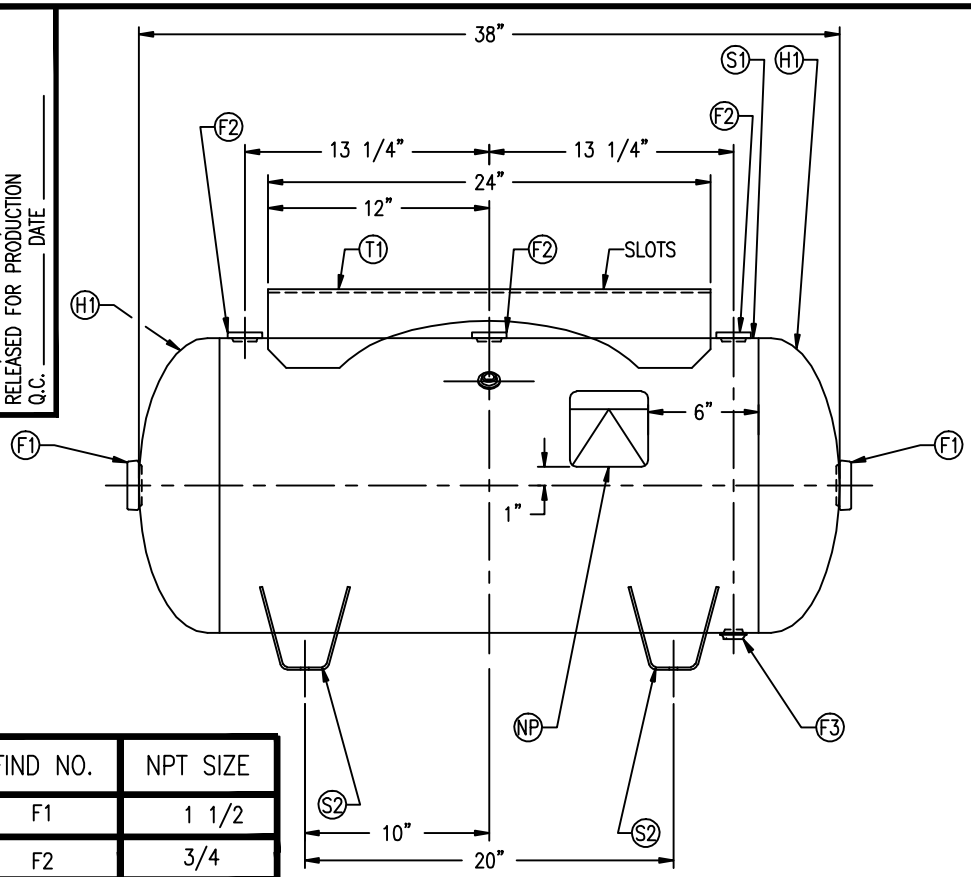

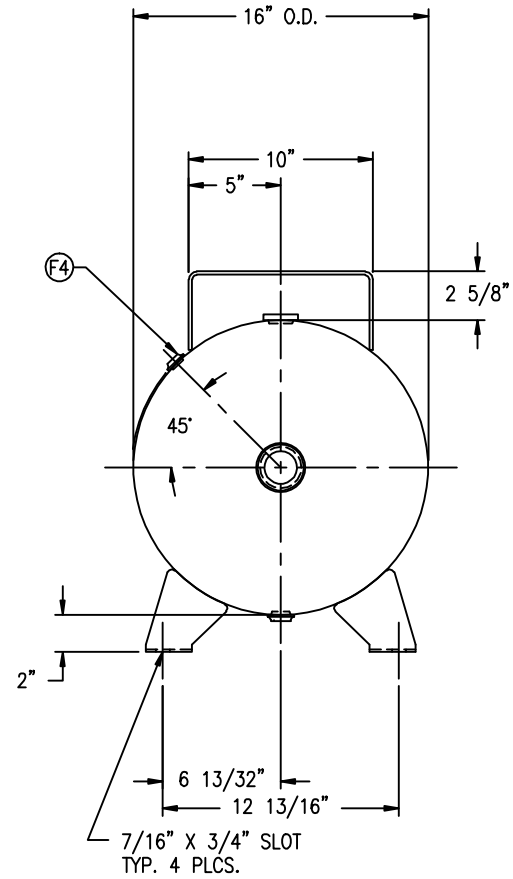

FIND NO.	NPT SIZE
F1	1 1/2
F2	3/4
F3	1/2
F4	1/4

SYM.	DATE	BY	REVISION	APR.	XREF REV.	NOTES
					C330 C C755	

SPECIFICATIONS

O.D. 16 LGTH. 38
MAWP 200 PSI @ 650 °F

GAL. 30 S.A. 14.1
WT. 111# CU.FT. 4.0

CRN F2151.1C

CODE: ASME SEC. VIII DIV. I, LATEST EDITION & ADDENDA

WELD DETAILS: M-1932
STD. TOLERANCES (UNLESS OTHERWISE NOTED): M-2461

MANCHESTER TANK

\\CORP2\DWG\302

HORIZONTAL AIR RECEIVER

DRAWN BY	DATE	SCALE: NONE
APP. BY	DATE	DRAWING NO. 302470